PDM Series

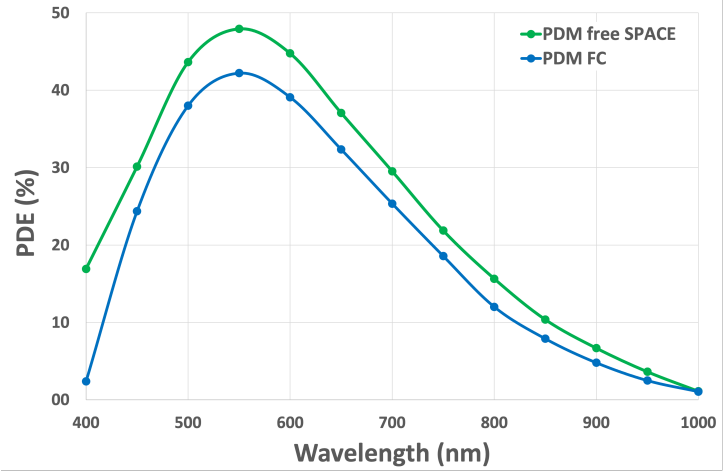

The PDM series photon counting detector modules are all solid-state instruments. They have high photon detection efficiency and generate an output pulse per detected photon with better than 50ps FWHM photon timing resolution. A version with an optical FC connector, able to couple SingleMode or MultiMode fibers, is available.

High Photon Detection Efficiency
up to 49% @ 550nm

Best-in class Timing Accuracy
Typ. **35 ps** FWHM

Low Dark Count Rate
as low as **1 cps**, depending on detector diameter

High performance uniformity
across detector area

MODULE FEATURES

- 20µm, 50µm and 100µm active sensing area diameter
- Window and Fiber Receptacle versions available
- Available in different Grade depending on Dark Counts specifications
- Peltier-cooled
- FC connector with coupling efficiency **≥ 80%**
- Low power consumption
- Robust and low cost

BIOMEDICAL APPLICATION

- Confocal Microscopy
- Single Molecule Spectroscopy
- Ultra-Sensitive Fluorescence
- Time-correlated single photon counting
- DNA & Drug Discovery

INDUSTRIAL APPLICATION

- Particle Sizing
- Optical testing of integrated circuits
- Metrology by Time of Flight measurements

QUANTUM APPLICATION

- Quantum Cryptography
- Single-photon source characterisation

ASTRONOMY APPLICATION

- Optical Range Finding, LIDAR & LADAR
- Astronomy Observations & Adaptive Optics

Overview

The PDM photon counting detector series are all solid-state instruments that detect light from 375 nm to 1000 nm wavelength range. They have a peak photon detection efficiency of 49% at 550 nm and generate a TTL output pulse per detected photon. Standard TTL pulses provide better than 250 ps timing resolution. Anyway, they also generate an additional output pulse, according to the NIM standard, able to provide better than 50 ps FWHM photon timing resolution.

The excellent photon detection efficiency and superior timing resolution is obtained through the use of custom epitaxial silicon Single Photon Avalanche Diodes (SPAD), an Active Quenching Circuits (AQC), specifically designed and optimized for photon counting applications which generates the positive TTL pulses, and a fast timing circuit board, always installed in PDM modules, which generates the negative NIM pulses. The SPAD is thermoelectrically (TEC) cooled and its temperature controlled, ensuring stabilized performance despite ambient temperature changes.

Thanks to the use of an AQC, it is also possible to gate on or off the detector. The PDM GATE IN input is thus very useful for switching on the detector only during specific time windows for better noise rejection and increased signal-to-noise ratio. The GATE IN input is very useful also to be used as an interlock input whenever the user wants to switch off the detector if an event occurs. The PDM GATE IN input is also not designed to be used as a fast-gated module. In the scientific literature, a fast-gated detector is a detector than can be switched from the OFF state to the ON state very precisely and in very short periods of times, with falling or rising times in the order of few hundreds of ps. In this case the MPD FastGATED SPAD should be purchased. The PDM GATE IN input, indeed, is not designed to accept high repetition external trigger signals and should be used to gate ON or OFF the SPAD with minimum gate ON or GATE OFF times in the orders of few tens of microseconds or longer.

The PDM maximum saturated count rate is the reverse of the deadtime, and it is 12-13 Mc/s. Of course, in order to avoid non-linearity errors in counting applications, a maximum count rate of at least four or five times smaller than the saturation level is recommended. The module is fully protected against light overload.

The PDM series is available with two optical interfaces: a free space optical window and a fibre connectorized version that guarantees > 80% coupling efficiency with selected fibres (see below for technical details). The PDM receptacle accepts the following fibre connectors: FC/PC Type N (Wide Key) and FC/PC Type R (Narrow Key). The improper use of FC/APC connector may damage either the receptacle or the FC/APC connector.

Mechanical drawings

Free Space

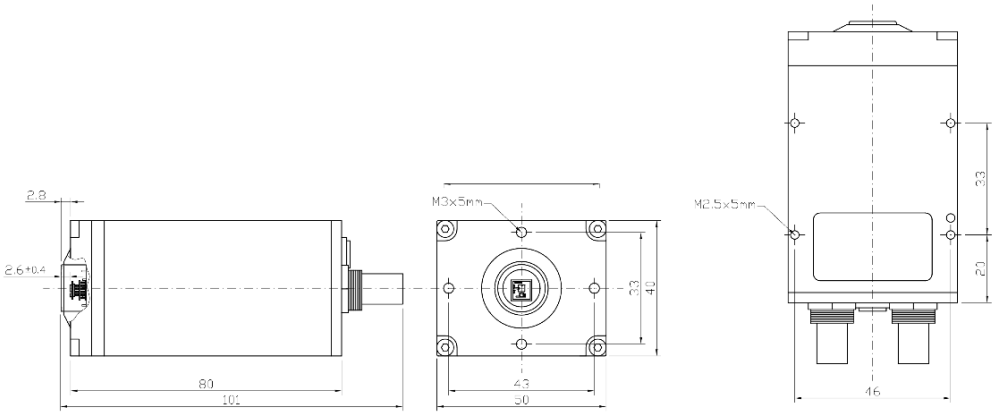

ALL DIMENSIONS ARE IN MILLIMETERS
GLOBAL TOLERANCES ±0.2 MILLIMETERS

FC version

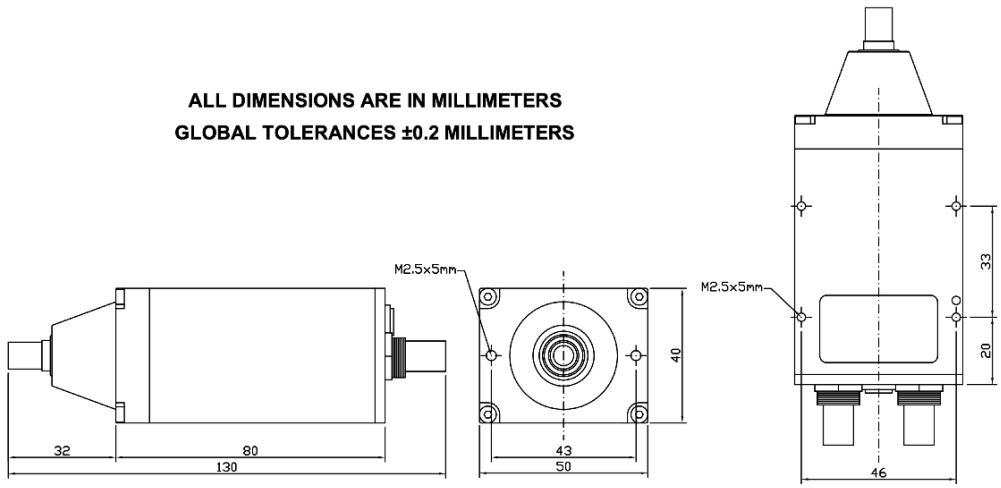

All Rights Reserved

Specifications

Specifications @ Tambient = 25°C	Min	Typ	Max	Units
Photon Detection Efficiency (free space)				
@ 400nm	14	17		%
@ 550nm	44	48		
@ 650nm	34	37		
Fiber Receptacle (FC/PC) coupling efficiency (CE)				
20 μm active area diam. - (wavelength > 470nm)	70	≥ 80		%
50 μm and 100 μm active area diam. - (wavelength > 470nm)	80			
Single Photon Timing Resolution (FWHM) (deconvolved value)				
TTL Counting Output - (wavelength > 470nm)			250	ps
NIM Timing Output - (wavelength > 470nm)		35	50	
After-pulsing probability	0.1		3	%
Dead Time		77		ns
Operating Conditions				
Case Temperature	15		40	°C
Optical Interface				
Free space – Glass thickness		1		mm
Fiber Receptacle input	FC/PC Type N or R			
Outputs				
TTL OUT – amplitude		3.4		V
TTL OUT – width		20		ns
TTL OUT – required load		50		Ω
TTL OUT – pulse rising edge (10-90%)		1		ns
TTL OUT – propagation time from detection to rising edge		12		ns
NIM OUT – amplitude		-700		mV
NIM OUT – width		17		ns
NIM OUT – required load		50		Ω
NIM OUT – pulse falling edge (10-90%)		450		ps
NIM OUT – propagation time from detection to falling edge		2		ns
Supply				
Module DC INPUT voltage (for reference only)		12		V
Module DC INPUT current			1.2	A
included AC/DC power supply	100 - 240 VAC, 50 - 60 Hz			
Gating input (see Overview paragraph also)	5V CMOS control (0V, detector off) 50Ω AC terminated, Internal 10kΩ pull-up			

DCR Grades Specifications

		Dark Counts Grades (cps) for TEC cooled SPADs					
		A *(< 500)*	***B*** *(< 250)*	***C*** *(< 100)*	***D*** *(< 50)*	***E*** *(< 25)*	***F*** *(< 5)*
Active Area Diameter	**20 μm**					√	√
	50 μm		√	√	√	√	
	100 μm	√	√	√	√	√	

Not cooled SPADs *with higher dark counts* ***can be supplied*** *to meet special OEM requirements*

FC table guideline

		Fiber types for getting the specified CE		
		SM *MFD: < 10 μm - NA: ≤ 0.20*	***MM*** *Core ≤ 62.5 μm - NA: ≤ 0.275*	***MM*** *Core: ≤ 105 μm - NA: ≤ 0.22*
Active Area Diameter	**20µm**	√		
	50µm	√	√	
	100µm	√	√	√

Using other types of fibers ***is surely possible*** *but coupling efficiency* ***may vary*** *depending on chosen one.*

All Rights Reserved

Accessories list

MPD provides also many different and very useful accessories. Please contact us or your local reseller for more information. The main ones are here below described.

Part Number	Description	Picture
$MAC001	Cable Lemo 00 - SMA 3m - SMA male connector - cable type RG316 - optional to $MAC008	
$MAC003	12V-18W universal wall mount power supply (cable length 1.8m)	
$MAC004 $MAC005 $MAC006	Mains plug Europe type Mains plug US/JP type Mains plug UK/Ireland type	
$MAC008	Lemo 00 - SMA adaptor - length =10cm - SMA female connector - cable type RG316 - optional to $MAC001	
$MAC009 $MAC024	Optical Table Universal Adaptor (left) for mounting on metric or imperial threaded optical tables Adapter plate to Cage 30 mm adapter (right)	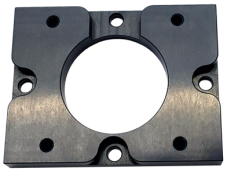

Ordering Information

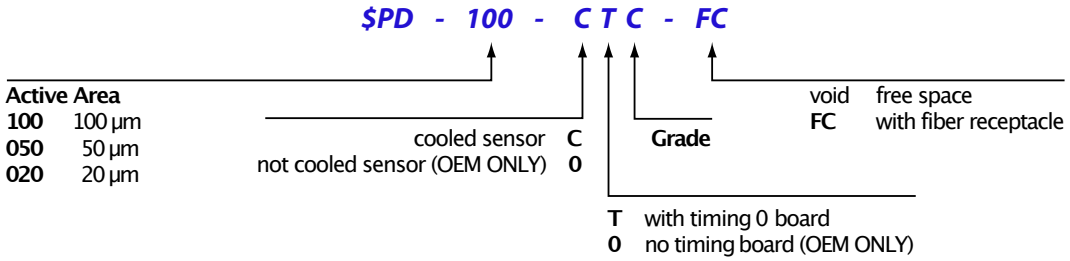

Products can be ordered directly from Micro Photon Devices or its representatives. For a complete list of representatives, visit our website at www.micro-photon-devices.com. Custom designed products are also available upon request.

Designed and built compliant with the European Union Directive 2011/65/CE (also known as RoHS 2)

Warranty

A standard legal warranty according to local legislation applies following shipment. Any warranty is null and void if the module case has been opened or if the absolute maximum ratings are exceeded. Specifications are subject to change without any notice. Document version 4.7 – October 2025.

All Rights Reserved